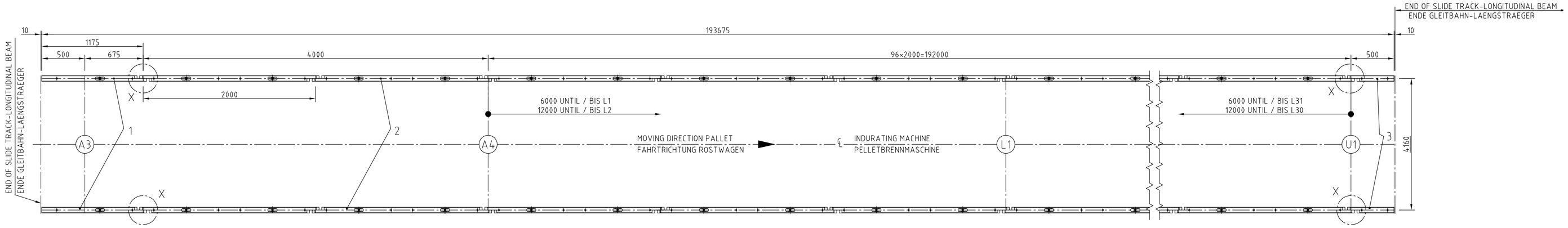

Reference Drawings / Documents Dazugehoerige Zeichnungen / Dokumente	
Drawing / Document No.: Zeichnungs / Dokumenten Nummer	Title Benennung
I76373-01 00601	ZUSAMMENSTELLUNG GLEITBAHN BLATT 1-2
8511-27-5110	ARRANGEMENT OF SLIDE TRACK SHEET 1-2
I76373-01 00602	ZUSAMMENSTELLUNG GLEITBAHN BLATT 2-2
8511-27-5111	ARRANGEMENT OF SLIDE TRACK SHEET 2-2

Part Teil Nr.	Description Benennung	Qty. Anzahl	Material Werkstoff:	Weight Gew.	Drawing No. Zeichn. Nr. Remarks Bemerkungen
1	Gleitschiene - Anfangsstueck				
	SLIDE RAIL - STARTING PIECE	2	***	47.3	
2	Gleitschiene - Mittelstueck				
	SLIDE RAIL - MIDDLE PIECE	196	***	7769.1	
3	Gleitschiene - Endstueck				
	SLIDE RAIL - END PIECE	2	***	19.7	
4	Sechskantschrb. M16x40				58 Reserve
	HEX. HEAD BOLT	850	8.8	77.7	ISO 4017
					58 SPARES
5	Federring A16		FSt.		58 Reserve
	SPRING WASHER	850	SPR.ST.	7.5	DIN 128
					58 SPARES
				7921.3	

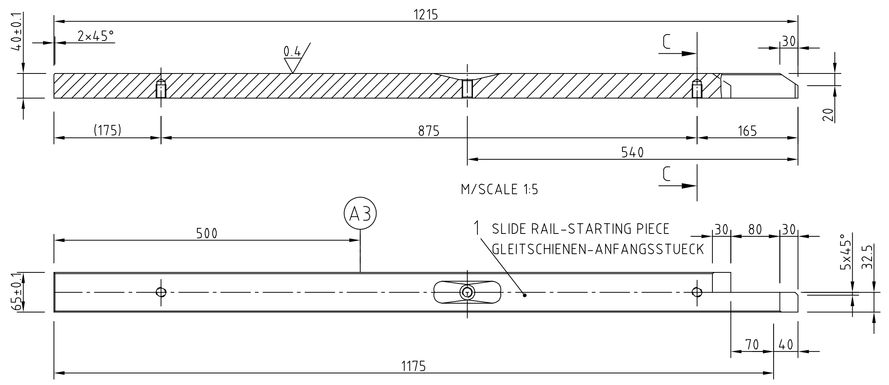

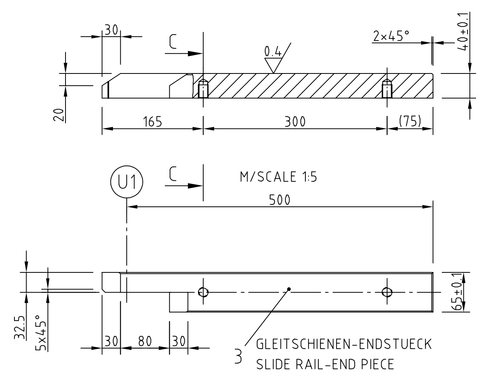

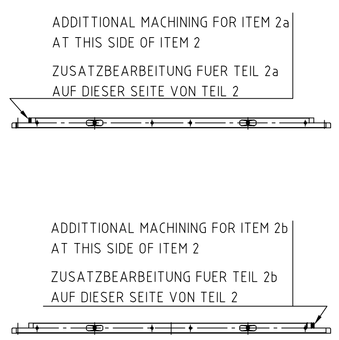

EXECUTION FOR POINT L7
AUSFUEHRUNG BEI PUNKT L7

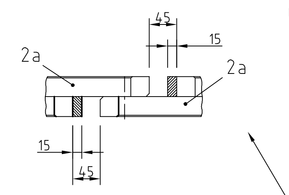

EXECUTION FOR POINT L24
AUSFUEHRUNG BEI PUNKT L24

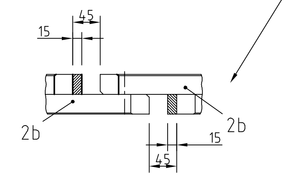

M/SCALE 1:5

**
AT POINTS L1 AND L30:
4 OFF EACH SLIDE RAILS ITEM 2 ONLY AT
1 SIDE 15mm ADDITIONALY MACHINED-
OFF = ITEM 2a RESP. 2b
(SEE ALSO REMARK BELOW RIGHT AND
INSTRUCTIONS LEFT)

BEI PUNKT L1 UND L30:
JE 4 GLEITSCHIENEN TEIL 2 NUR AUF
1 SEITE 15mm ZUSAETZLICH AUSGEARBEITET
= TEIL 2a BZW. 2b
(SIEHE AUCH VERMERK UNTEN RECHTS UND
ANWEISUNG LINKS)

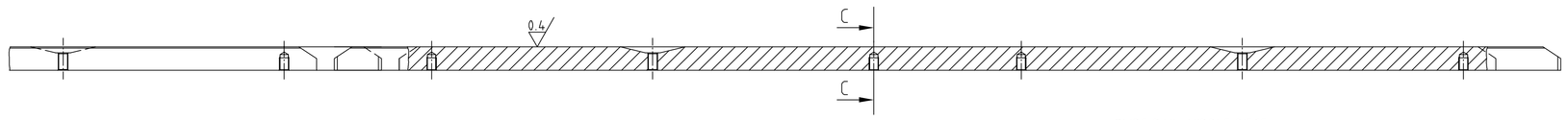

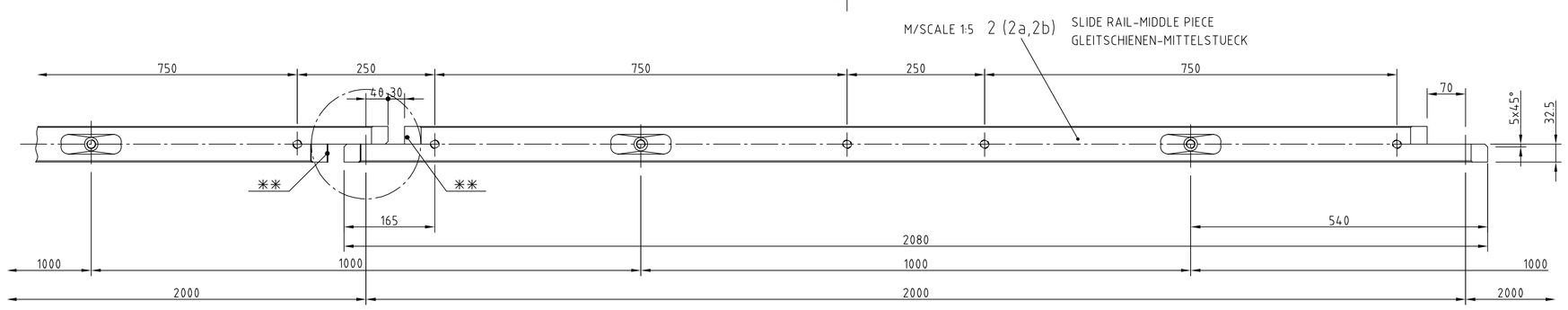

DETAIL
EINZELHEIT X
M/SCALE 1:1

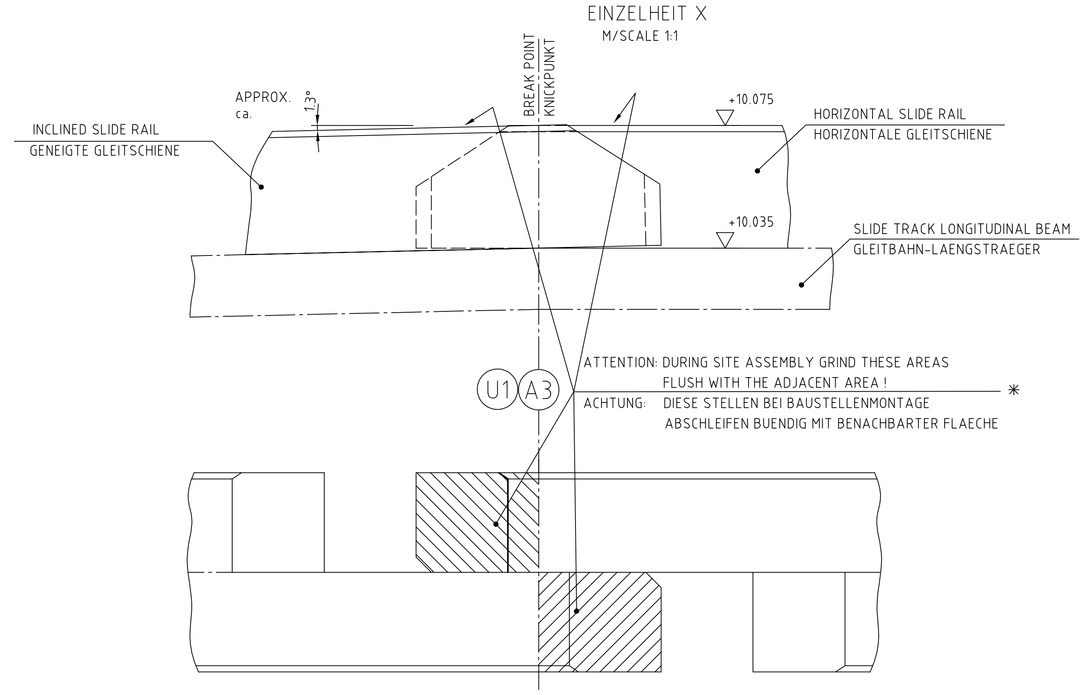

SECTION
SCHNITT C-C
M/SCALE 1:1

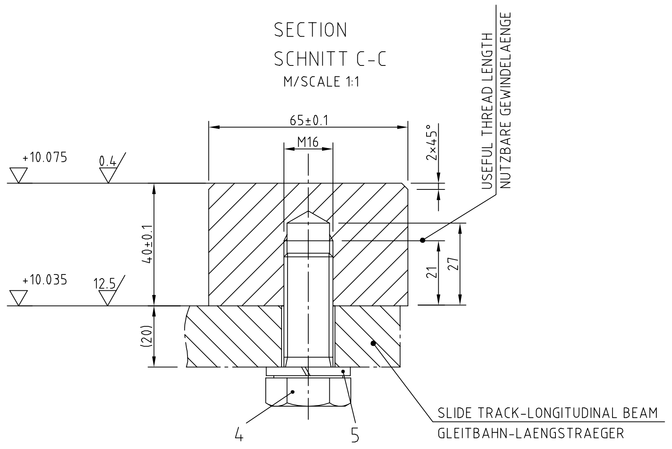

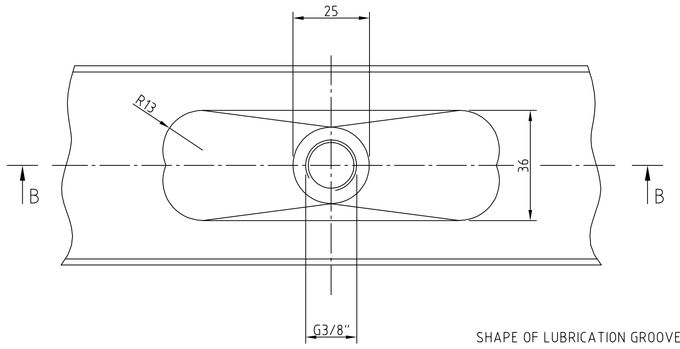

SHAPE OF LUBRICATION GROOVE (DEPENDING ON MANUFACTURER'S)
FORM DER SCHMIERNUT (ABHAENGIG VOM HERSTELLER)

SECTION
SCHNITT B-B
M/SCALE 1:1

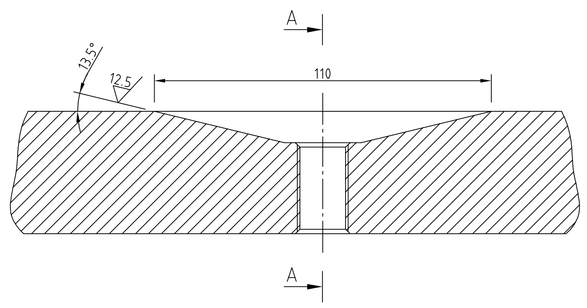

SECTION
SCHNITT A-A
M/SCALE 1:1

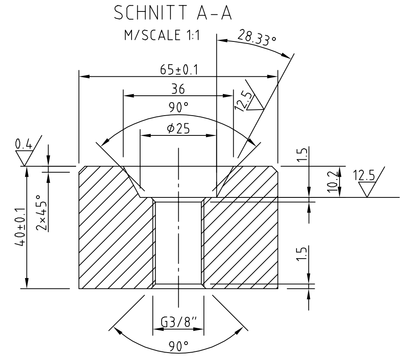

* FOR AREAS AT U1 LIKEWISE EXECUTED
FUER STELLE U1 SINNGEMAESS AUSFUEHREN

** ATTENTION DURING ERECTION:
AT POINT L1 AND L30 INSTALL RAILS WIRH ENLARGED CLEARENCE BECAUSE OF ENLOGATION POINT.
AT L1 USE ITEM 2a ; AT L30 USE ITEM 2b
ACHTUNG BEI MONTAGE:
BEI L1 UND L30 SCHIENEN MIT ERHOEHTEN SPALT EINBAUEN, WEGEN VERGROESSERTEM DEHNSTOSS.
BEI L1 EINBAU TEILE 2a ; BEI L30 EINBAU TEILE 2b

*** MATERIAL: 2 COMPONENT MATERIAL L85 OR CORG-G-EXTRA 90 WITH A SURFACE HARDNESS OF 62-64HRC.
MATERIAL: 2 KOMPONENTEN-MATERIAL L85 ODER CORG-G-EXTRA 90 MIT EINER OBERFLAECHENHAERTE VON 62-64HRC.

The surface finish specification is in conformity with DIN EN 1302 (Ra-values in µm)
All welded seams except the rips shall be continuous. Unless specified otherwise in the drawing, the weld seam thickness shall be 0,5-0,7 time the thinner sheet thickness.
Allowable deviations for dimensions without tolerance specification: For welding constructions according to DIN EN ISO 13920. For parts produced by cutting or non cutting shaping according to DIN ISO 2768.
All flanges without machining instructions shall be straightened after welding. Maximum deviation from plane surface ± 1 mm.

The corresponding specification must be adhered to.
Execution of welding work according to AWS A1.1 (DIN EN ISO 5817). for butt welds: weld strength group C for fillet welds: weld strength group B
All items be bolted together shall be drilled with the same jig or on CNC- machine tool.

3.2 (0.4 12.5)

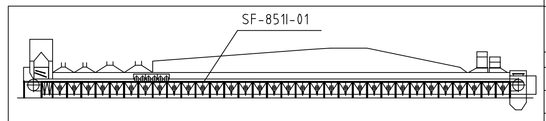

REV.	DATA	TIPO	POR	SOLICIT.	DESCRIÇÃO
					REVISÕES

TIPO DE EMISSÃO
(A) PRELIMINAR (B) PARA APROVAÇÃO (C) PARA CONHECIMENTO (D) PARA COTAÇÃO (E) PARA CONSTRUÇÃO (F) CONFORME COMPRADO (G) CONFORME CONSTRUIDO (H) CANCELADO

RESPONSÁVEL		DATA
PROJ.	SCHN	25.02.06
DES.	SCHN	25.02.06
VER.	DEP	25.02.06
APROV.	KHOF	25.02.06

REV. 1
FOLHA

A0