GEZEICHNETE ANORDNUNG DER ABSTREIFER
FUER DREHRICHTUNG "RECHTS".
BEI DREHRICHTUNG "LINKS" SIND DIE
ABSTREIFER SPIEGELBILDLICH ANZUORDNEN.

ARRANGEMENT OF SCRAPERS AS DRAWN
FOR "RIGHT HAND" ROTATION OF DISC.
IN CASE OF "LEFT HAND" ROTATION
THE SCRAPERS SHOULD BE ARRANGED
SYMMETRICALLY.

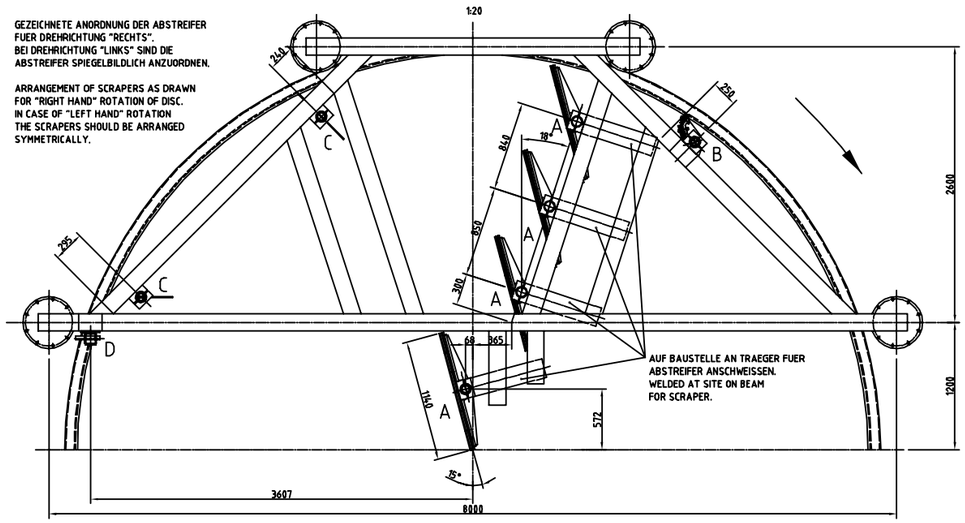


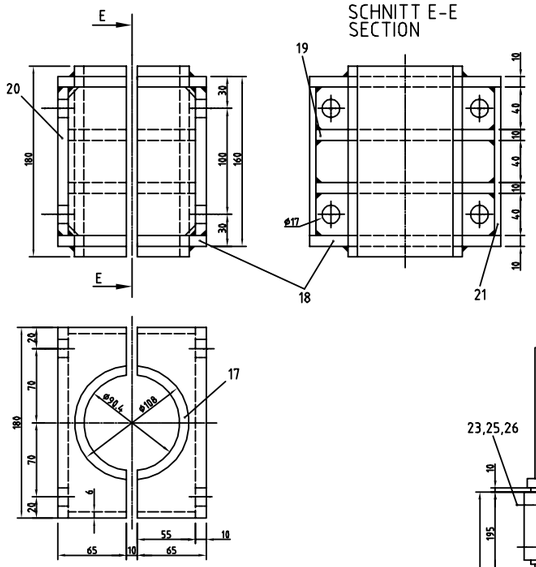


| Part Teil Nr. | Description Benennung | Qty. Anzahl | Material Werkstoff: | Weight Gew. | Drawing No. Remarks Zeichn. Nr. Bemerkungen |
|---|---|---|---|---|---|
| 31 | Blech 10 ... 200x600 | 2 | 1.4301 | 18,0 | |
| | PLATE | | | | |
| 32 | Blech 10 ... 110x395 | 1 | RSt 37-2 | 3,0 | |
| | PLATE | | | | |
| | | | | 820,0 | |

| Reference Drawings / Documents Dazugehoerige Zeichnungen / Dokumente | |
|---|---|
| Drawing / Document No.: Zeichnungs / Dokumenten Nummer | Title Benennung |
| E76003-01 00130 | Pelletierteller Zusammenstellung |
| 840K-23-5015 | PELLETIZING DISC ASSEMBLY |
| E76003-01 00146 | ABSTREIFER TYP D |
| 840K-23-5031 | SCRAPER FOR DISC RIM |

| Part Teil Nr. | Description Benennung | Qty. Anzahl | Material Werkstoff: | Weight Gew. | Drawing No. Remarks Zeichn. Nr. Bemerkungen |
|---|---|---|---|---|---|
| 1 | Blech 20 ... 200x1090 | 4 | RSt 37-2 | 103.0 | |
| | PLATE | | | | |
| 2 | Blech 10 ... 110x1070 | 4 | RSt 37-2 | 23.0 | |
| | PLATE | | | | |
| 3 | Blech 10 ... 110x200 | 4 | RSt 37-2 | 5.0 | |
| | PLATE | | | | |
| 4 | Rohr ø88.9x10 ... 1000 | 6 | St 35 | 117,0 | DIN 2448 |
| | PIPE | | | | |
| 5 | Blech 20 ... 460x650 | 1 | RSt 37-2 | 47.0 | |
| | PLATE | | | | |
| 6 | Blech 10 ... 110x395 | 1 | RSt 37-2 | 2.5 | |
| | PLATE | | | | |
| 7 | Rohr ø88.9x10 ... 1250 | 1 | St 35 | 24.0 | DIN 2448 |
| | PIPE | | | | |
| 8 | Blech 10 ... 60x190 | 29 | RSt 37-2 | 26.0 | |
| | PLATE | | | | |
| 9 | Blech 15 ... 100x190 | 29 | RSt 37-2 | 64.0 | |
| | PLATE | | | | |
| 10 | Stellring 90 | 7 | St | 10,5 | DIN 705 |
| | ADJUSTING RING | | | | |
| 11 | Blech 10 ... 180x685 | 4 | RSt 37-2 | 39.4 | |
| | PLATE | | | | |
| 12 | Blech 10 ... 180x400 | 4 | RSt 37-2 | 23.0 | |
| | PLATE | | | | |
| 13 | Blech 10 ... 180x717 | 4 | RSt 37-2 | 41.4 | |
| | PLATE | | | | |
| 14 | Blech 10 ... 90x180 | 4 | RSt 37-2 | 5.2 | |
| | PLATE | | | | |
| 15 | Blech 10 ... 400x685 | 4 | RSt 37-2 | 52.8 | |
| | PLATE | | | | |
| 16 | Rippen 10 ... 80x80 | 16 | RSt 37-2 | 4.0 | |
| | RIB | | | | |
| 17 | Rohr ø108x8.8 ... 180 | 12 | St 35 | 46.2 | DIN 2448 |
| | PIPE | | | | |
| 18 | Blech 10 ... 65x180 | 48 | RSt 37-2 | 28.8 | |
| | PLATE | | | | |
| 19 | Blech 10 ... 55x168 | 40 | RSt 37-2 | 19.2 | |
| | PLATE | | | | |
| 20 | Blech 10 ... 140x180 | 24 | RSt 37-2 | 47.4 | |
| | PLATE | | | | |
| 21 | Blech 6 ... 55x140 | 48 | RSt 37-2 | 16.8 | |
| | PLATE | | | | |
| 22 | 6kt.Schrb. M16x85 | 58 | 8.8 | 8.8 | ISO 4014 |
| | HEX. BOLT | | | | |
| 23 | 6kt.Mutter M16 | 102 | 8 | 3.4 | ISO 4032 |
| | HEX. NUT | | | | |
| 24 | Scheibe A17 | 58 | St | 0.7 | DIN 125 |
| | WASHER | | | | |
| 25 | 6kt.Schrb. M16x180 | 32 | 8.8 | 8.6 | ISO 4014 |
| | HEX. BOLT | | | | |
| 26 | Federring A16 | 44 | FSt | 0.3 | DIN 128 |
| | CURVED SPRING WASHER | | SPRING-STEEL | | |
| 27 | 6kt.Schrb. M16x330 | 12 | 8.8 | 6,3 | ISO 4014 |
| | HEX. BOLT | | | | |
| 28 | Gummi 2x60x190 | 29 | Gummi | 1.0 | |
| | RUBBER | | RUBBER | | |
| 29 | Gummi 2x100x190 | 29 | Gummi | 1.7 | |
| | RUBBER | | RUBBER | | |
| 30 | Schleissplatte 100x190x15 | 29 | * | 22.0 | |
| | WEAR PLATE | | | | |

* CARBOFRAX D
SILICON CARBIDE
Chemische Zusammensetzung/CEMICAL COMPOSITION:
SiC 89,4%; CaO 0,01%; $Al_2O_3$ 0,75%; $SiO_2$ 9,0%; $Fe_2O_3$ 0,4%; Andere/Others 0,44%

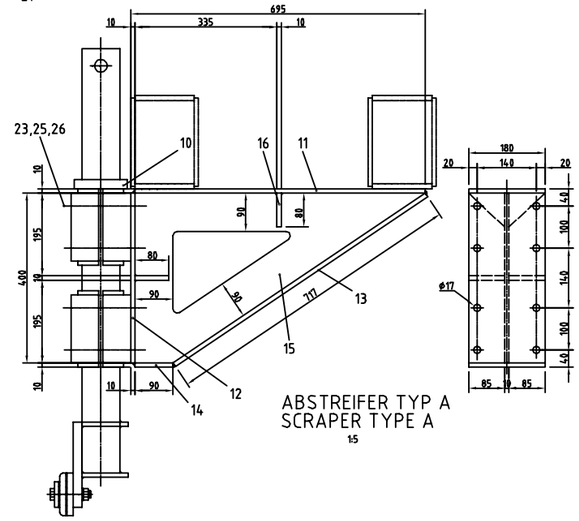


ABSTREIFER TYP A
SCRAPER TYPE A
1:5

ABSTREIFER TYP A
SCRAPER TYPE A
1:5

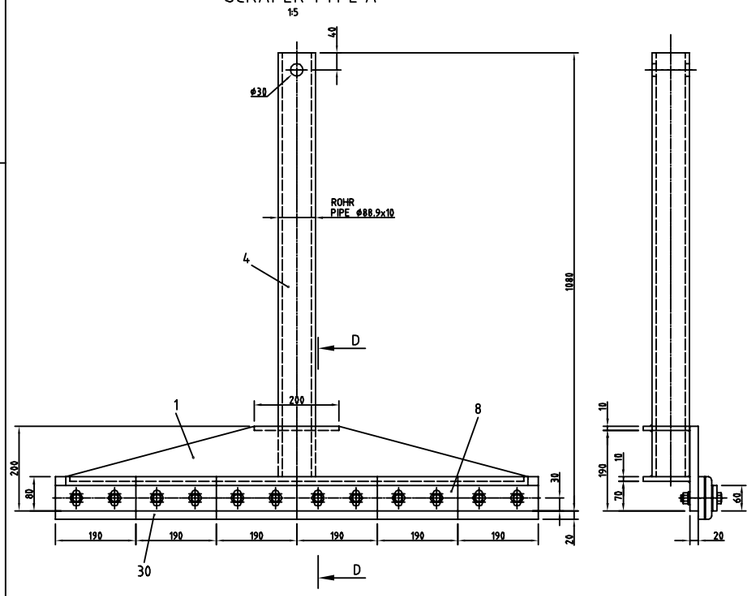


ABSTREIFER TYP B
SCRAPER TYPE B
1:5

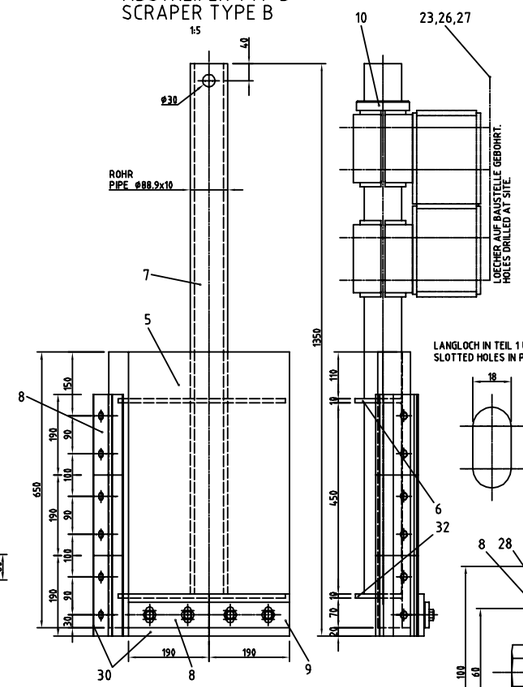


SCHNITT D - D
SECTION
1:1

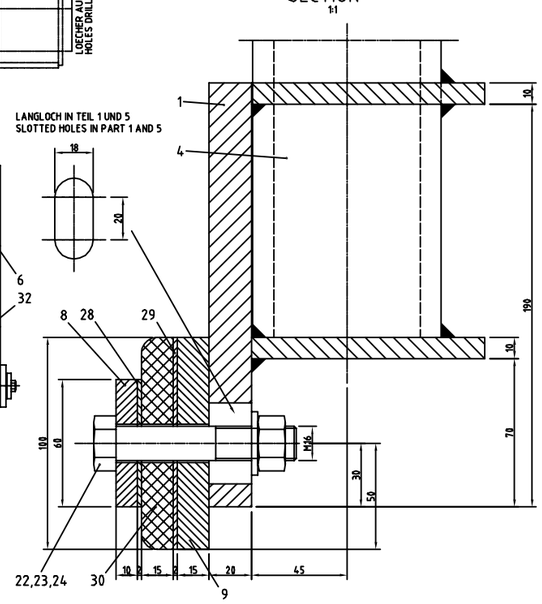


ABSTREIFER TYP C
SCRAPER TYPE C
1:5

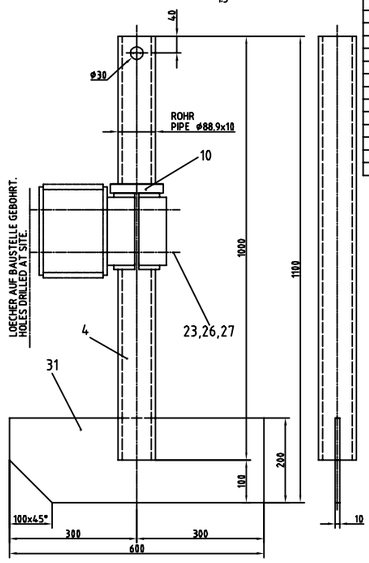


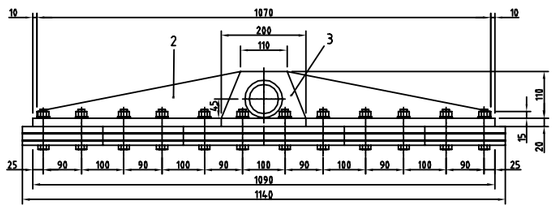

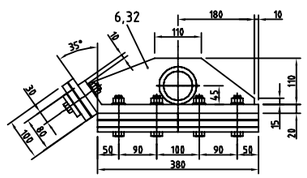

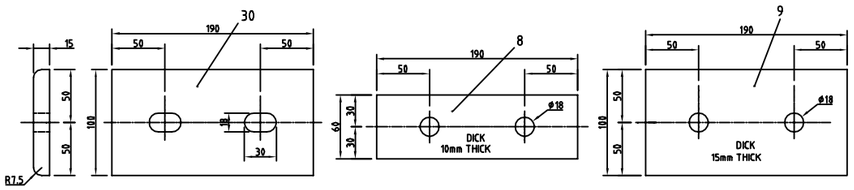


All items be bolted together shall be drilled with the same jig or on CNC- machine tool.

Allowable deviations for dimensions without tolerance specification:
For welding constructions according to DIN 8570 - BE.
For parts produced by cutting or non cutting shaping according to DIN ISO 2768 - mH.

All flanges without machining instructions shall be straightened after welding.
Maximum deviation from plane surface ± 1 mm.

All welded seams except the rips shall be continuous.
Unless specified otherwise in the drawing, the weld seam thickness shall be 0,5-0,7 time the thinner sheet thickness.

The corresponding specification must be adhered to.

Execution of welding work according to DIN EN 25817.
for butt welds: weld strength group C
for fillet welds: weld strength group B

| | | | | | | | |
|---|---|---|---|---|---|---|---|
| 1 | FERRI | 15.11.01 | FERRI | 15.11.01 | EUFRAN | 1 | ALTERAÇÃO ITENS 8 E 32 |
| 0 | BRUCH. | 23.03.99 | BGRD | GIS | 25.03.99 | E | FIRST ISSUE |
| Rev. | Name | Date | Name | Name | Date | Status | Kind of Revision |
| | Prepared/Changed | | Checked | | Released | | |

TYPE OF ISSUE
(A) PRELIMINARY (B) FOR APPROVAL (C) FOR INFORMATION
(D) FOR INQUIRY (E) FOR CONSTRUCTION (F) AS BUILT
(G) AS BUILT (H) CANCELLED (I)

CVRD

São Luis Pelletizing Plant

Scale 1:20 1:5 1:2 1:1 | Original Size A0

Plant:
Module:
Assembly: BD-840K-01-10
Part:
Derived from:

mg engineering Ltd.

BALLING
PELLETIZING DISC ø 7500
SCRAPER
DESIGN DRAWING FOR MACHINES

| ICC | DG | Eng. Service No. |
|---|---|---|
| | | 030412 |

Job: CVRD

DWG No. 840K-23-5030

Layer No. E76003-01 00145

REV. 1

DP-Mand-Nr: P:\AUFTRAG\76003-01\DEQ\BALLING\ZCH\03_00145.DWG

FORM-A0.DWG

A0 SIZE